AP&T®

Micro electrostatic sensor
AP-YV3304

Micro electrostatic sensor



AP&T

The product is widely used in industries such as electronics, optoelectronics, and plastics

The AP-YV3304 micro electrostatic sensor is a testing instrument developed and produced by Anping Company for detecting the electrostatic voltage on the surface of charged objects. It employs non-contact measurement technology to minimize the impact of the instrument on the electrostatic field of the object's surface, ensuring measurement accuracy.

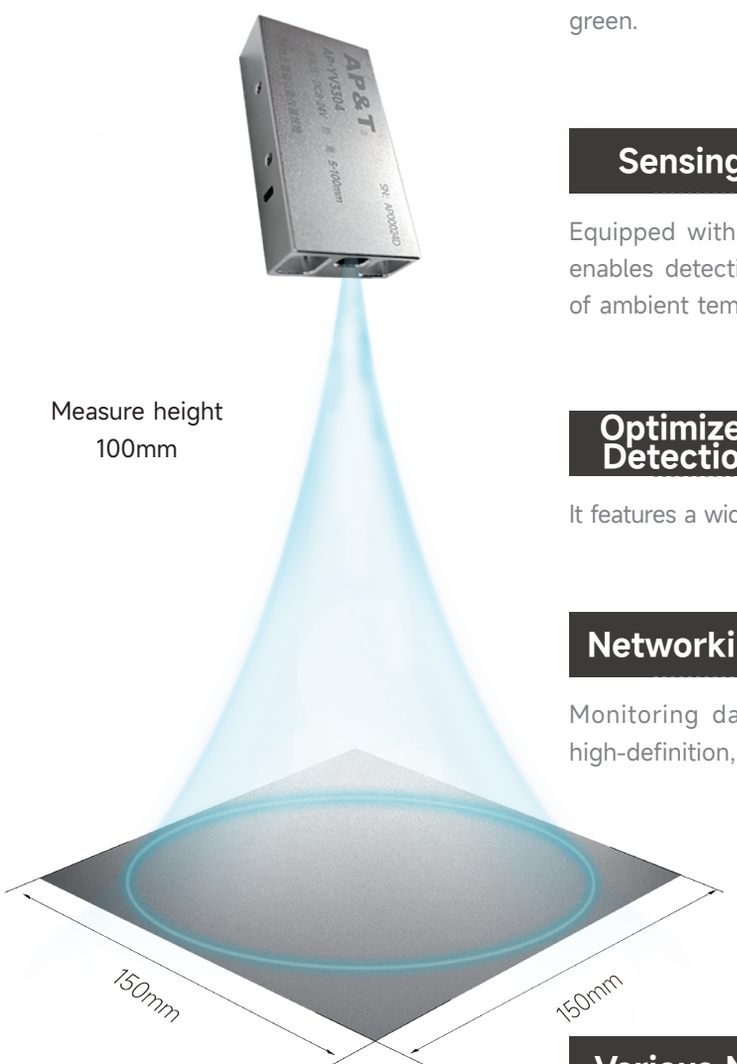

Intelligent Setting Electrostatic Alarm Threshold

The electrostatic safety (alarm) threshold can be set via a remote control or monitoring software. If the threshold is exceeded, a red light alarm is triggered; within the threshold, the indicator light remains green.

Sensing Dual-Sensitive Sensing with Multiple Functions

Equipped with built-in distance and temperature/humidity sensors, it enables detection distance compensation and simultaneous monitoring of ambient temperature and humidity.

Optimized Detection Detection Distance

It features a wide detection potential range and high detection accuracy.

Networking Real-Time Data Transmission to PC

Monitoring data can be transmitted to a PC in real time, with a high-definition, comprehensive LCD data display terminal.

Various Models

Depending on the installation environment, vertical or horizontal product structures are available.

◈ Product Parameters and Technical Features

■ Performance Parameters

➤ Technical Specifications:

NO.	Technical Specifications	
1	Working Voltage	DC8-24V
2	Working Current	< 50mA
3	Sampling Time	About 1ms
4	Vibration	< 1KHz
5	Noise	< 5dB
6	Signal Output	RS485(115200bps,8,1,n,n)（≧ 20ms）
		Open Collector（<50V/100mA）
8	Communication Distance	< 300m
9	Alarm Indicator	Red LED
10	Threshold Setting Range	0 ~ ±5000V
11	Power-on Standby Time	5s
12	Detection Distance Range	5mm-100mm

※ Product specifications and performance may change due to improvements and upgrades. Please refer to the actual product as no prior notice will be given.

➤ Electrostatic Voltage Range and Minimum Resolution for Each Detection Distance:

Detection Distance	Measurement range	Resolution	Measuring error	Error Zero jump	Calibration
5mm	±2000V	1V	10%	±1V	
10mm	±2000V	1V		±3V	
25mm	±2000V	1V		±5V	√
50mm	±5000V	1V		±10V	
100mm	±5000V	1V		±10V	
Note: If the detection distance is set incorrectly, the accuracy of the measured electrostatic voltage cannot be guaranteed.					

※ Product specifications and performance may change due to improvements and upgrades. Please refer to the actual product as no prior notice will be given.

➤ Network Port Wiring Information:

Network Interface			
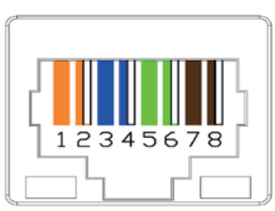	1、2	Orange, white -orange	VCC
	3	Blue	RS485+B
	4	White-blue	RS485+A
	5、6	Green, white-green	GND
	7	Brown	C1
	8	White -brown	C2
	9	Metallic shield shell	PE

※ Product specifications and performance may change due to improvements and upgrades. Please refer to the actual product as no prior notice will be given.

■ Operational Technical Tips

- During operation, align with the front LED of the product (the distance is not more than 1m), press the unlock key at first, then press the corresponding functional keys to set, and the red light flashes when the key is pressed.
- During zeroing setting, the calibration plate should be much larger than the detection window of sensor, and the polar plate and sensor should be well grounded.
- During the calibration operation, the calibration plate should be much larger than the detection window of sensor and the sensor should be well grounded.
- There should be no shield between the sensor and the detected object; otherwise the accuracy of the detection result will be affected.
- There should be no electrical equipment that may affect the sensor within the detection range of the sensor.
- To accurately measure the charged object, the plane of the sensor detection window must be parallel to the surface of the detected object.
- When the charged object is smaller than the calibration plate, the measured value will be smaller than the actual electrostatic value of the charged object.
- When the charged object is larger than the calibration plate, the measured value will be larger than the actual electrostatic value of the charged object.
- Do not set zero in electrostatic charge state or in the electrostatic measurement process (non-static calibration process); if zero clearing is made during the electrostatic test, the displayed electrostatic value will be zero.
- Influence of temperature and humidity on electrostatic detection:

  ① The lower the temperature is, the smaller the humidity is, the less water is contained in the space, and the more easily the surrounding object triboelectric and the greater the interference to the electrostatic detection is.

  ② The higher the temperature is, the higher the humidity is, the more water is contained in the space, and the more active the movement of water molecules is, which is easy to produce corona or spark discharge to the calibration device and the greater the influence on the uniform electric field generated by the calibration device, the weaker the uniform electric field will be.

  ③ Under the same humidity, the lower the temperature is, the less water is contained in the space and the more easily the surrounding object triboelectric and the greater the influence on the electrostatic detection is.

- Therefore, during electrostatic calibration/detection, the environmental temperature and humidity should be clearly indicated during calibration/detection.

■ Monitoring Terminal Display Information

Working Status	Device Address	Detection Distance	Threshold Voltage	Real-time Voltage
Monitors sensor operation and alarm output	Displays the set sensor address	Shows the preset detection distance	Displays the set safety (alarm) threshold	Shows real-time surface voltage of measured object

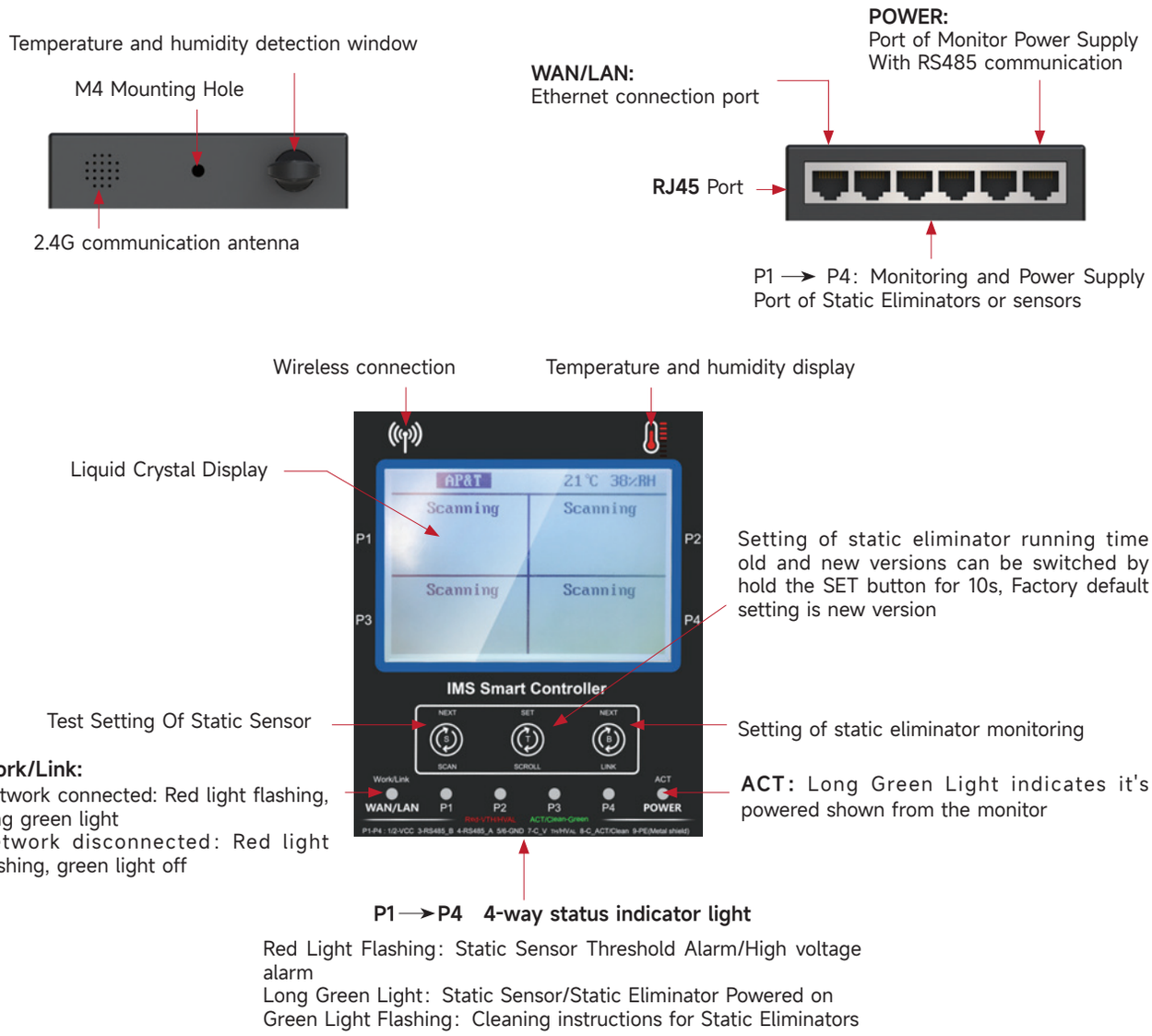

Figure 2 System Monitoring Terminal

■ Mechanical Parameters

➤ Sensor Mechanical Parameters:

Dimensions：63*26*12.5mm（L*W*H）
Net Weight：About 49.7g

• **Vertical Sensor Dimension Diagram:**

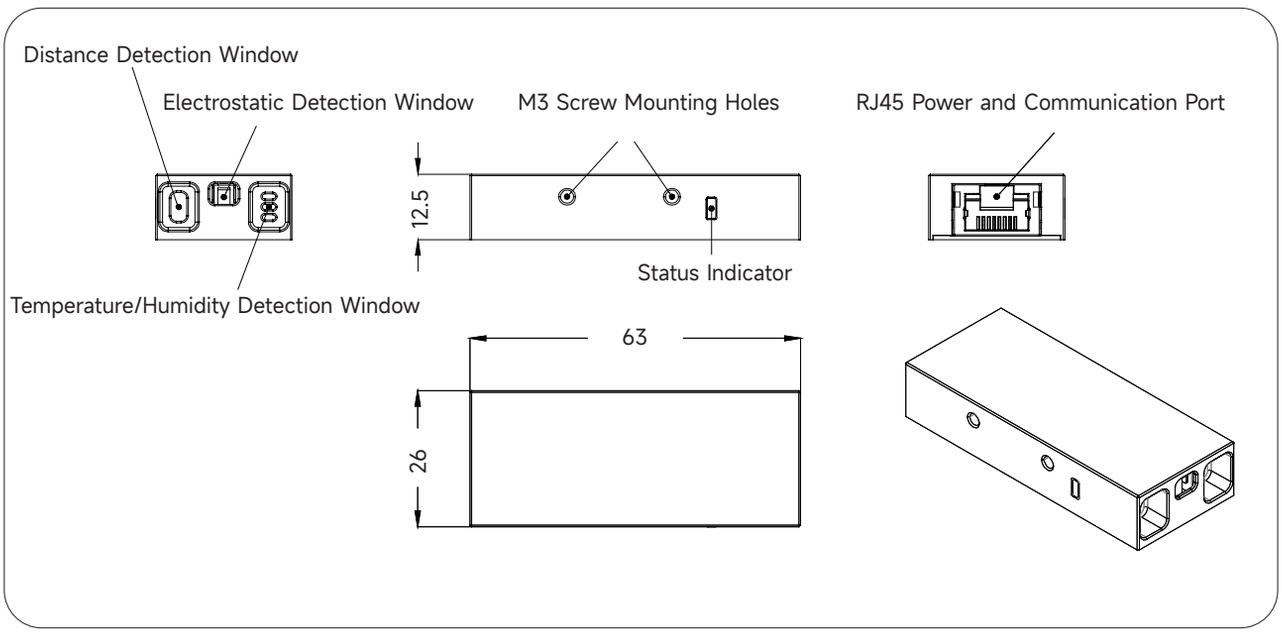

Figure 3-1 Vertical Sensor Dimension Diagram

• **Horizontal Sensor Dimension Diagram:**

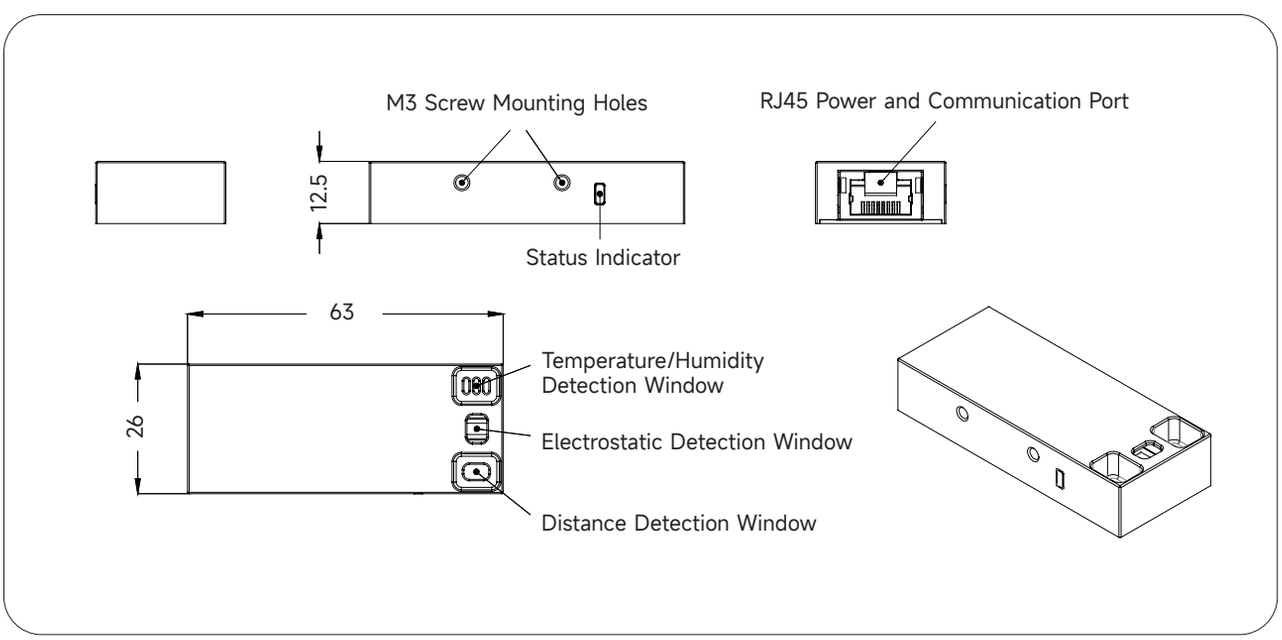

Figure 3-1 Horizontal Sensor Dimension Diagram

➤ Monitoring Terminal Mechanical Parameters:

Dimensions: 100*120*25mm（L*W*H）
Net Weight: About 400g

• **Monitoring Terminal Dimension Diagram:**

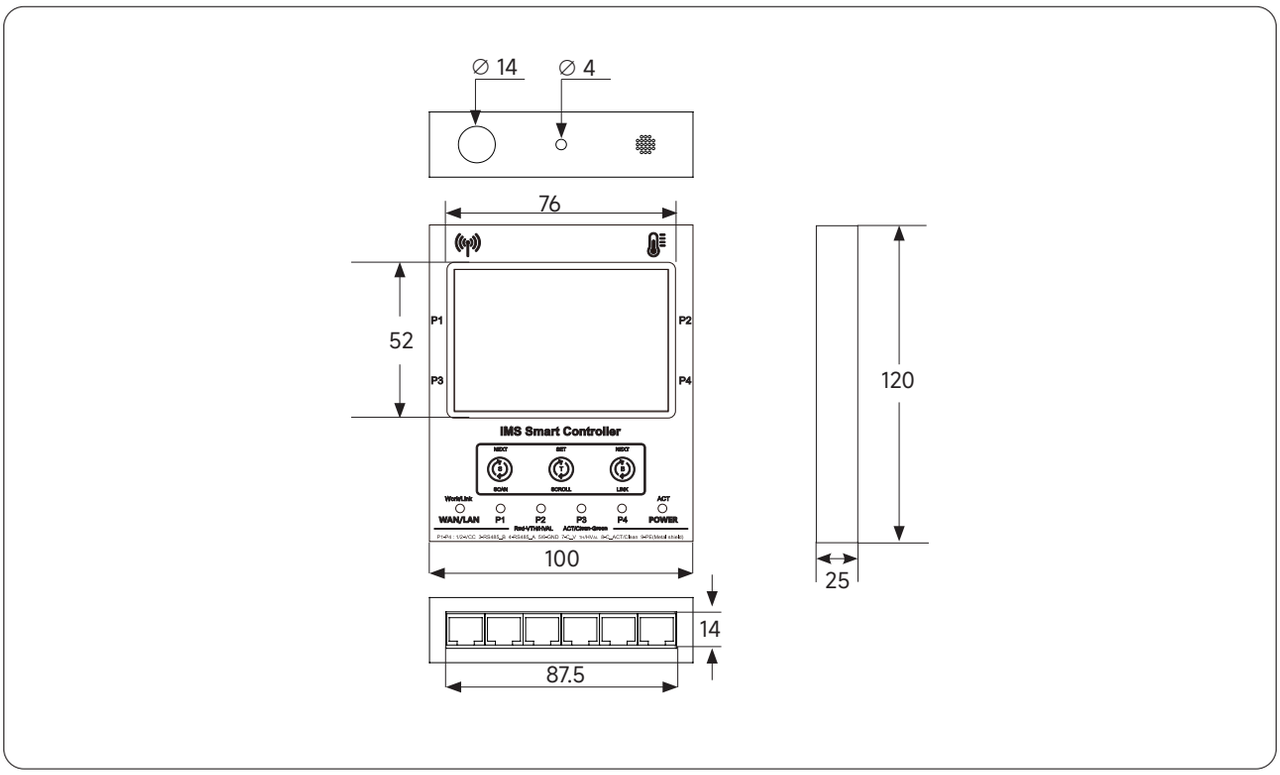

Figure 4 System Monitoring Terminal Dimension Diagram

➤ Power Adapter Mechanical Parameters:

Dimensions: L160*W51*H34.6mm
Net Weight: About 180g

• **Power Adapter Dimension Diagram:**

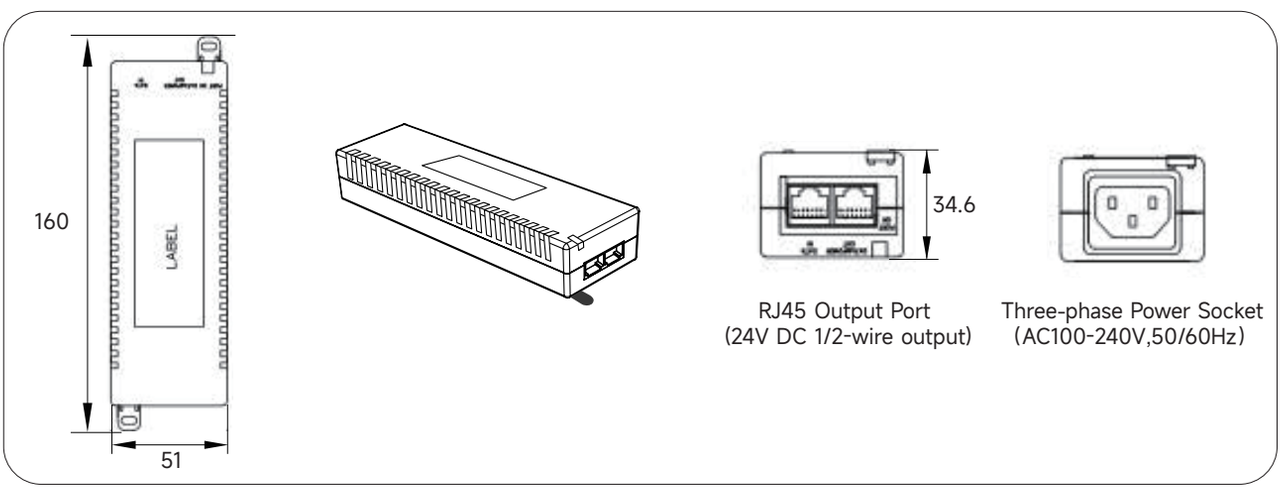

Figure 5 Power Adapter Dimension Diagram

➤ Communication Converter Mechanical Parameters:

Dimensions: < 90*28*22mm（L*W*H）
Net Weight: About 20.5g

• **Communication Converter Dimension Diagram:**

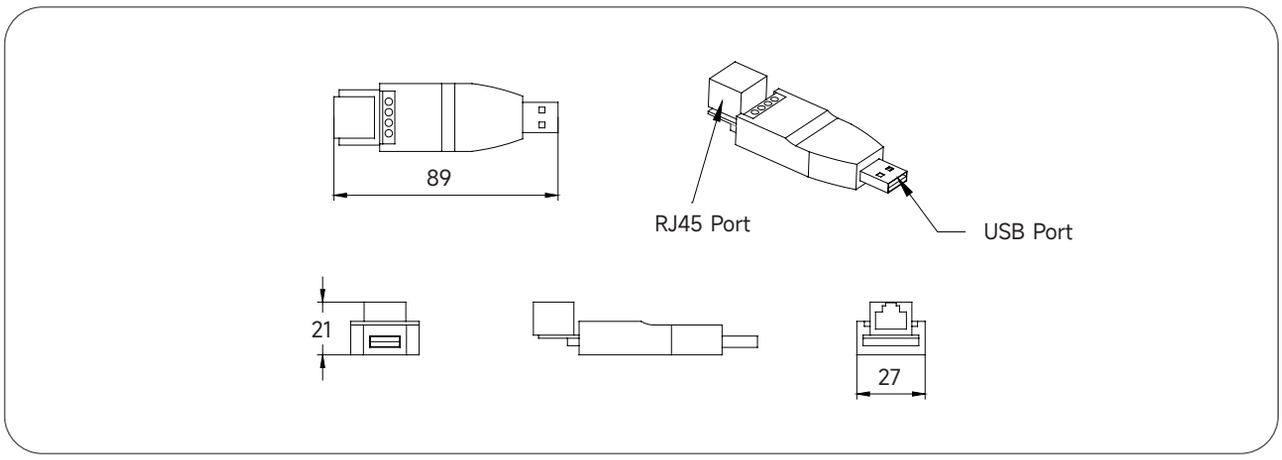

Figure 6 Communication Converter Dimension Diagram

➤ IMS Data Transceiver Power Supply Mechanical Parameters:

Dimensions: 200*161*50mm（L*W*H）
INet Weight: About 1100g

• **IMS Data Transceiver Power Supply Dimension Diagram:**

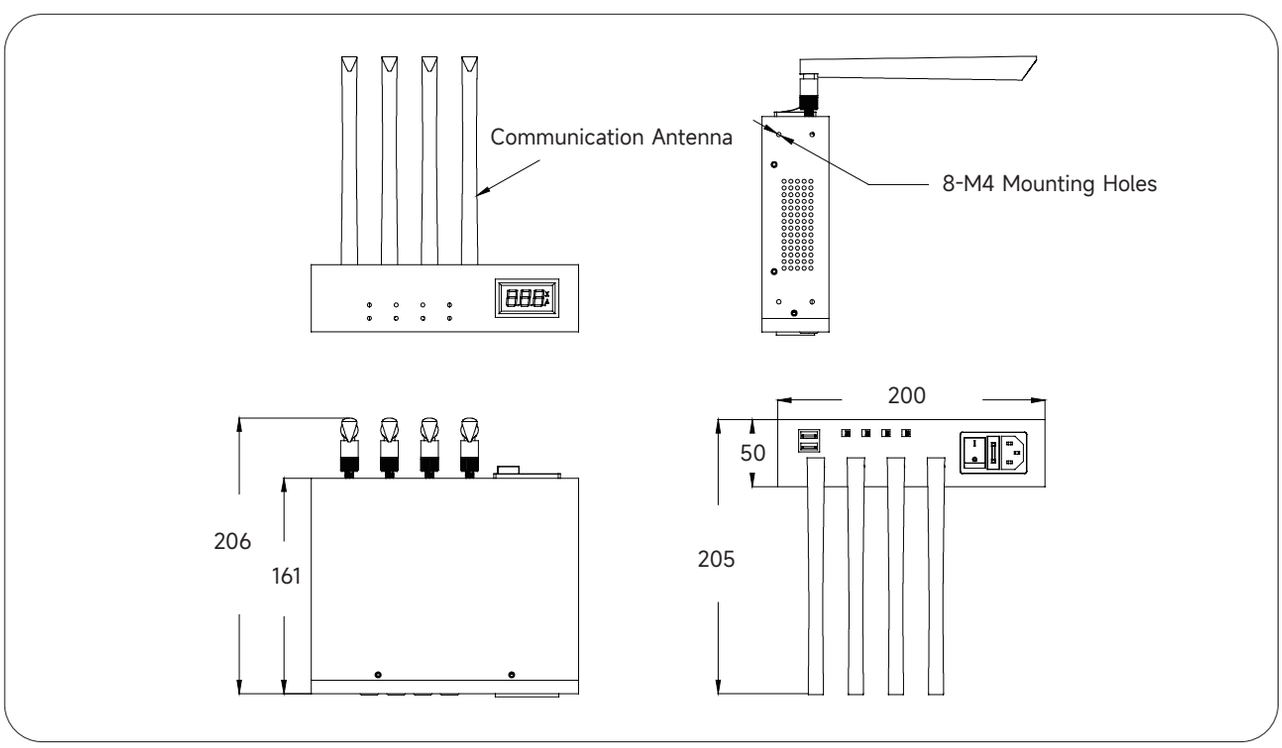

Figure 7 System Integrated Power Supply Dimension Diagram

◈ Operating Environment

Working Temperature	Working Humidity
0°C → + 50°C	30 → 65%RH

◈ Product Calibration

➤ **Calibration Environmental Conditions:**
Calibration environmental conditions and requirements are as follows:

Ambient Temperature 20°C → ±3°C	**Relative Humidity** 40 → 45%RH
No measurable electric fields, magnetic fields, or positive/negative ions in the vicinity	Ground wire required, with resistance <1Ω

◈ Calibration Equipment

Calibration instruments must be certified by metrology institutions, meet calibration requirements, and be within validity period.

Calibration equipment includes:DC high-voltage meter, DC high-voltage power supply, standard plate electrode, distance adjuster, etc.The sensor is positioned on the central axis of the calibration plate. The non-contact electrostatic voltmeter calibration system consists of:

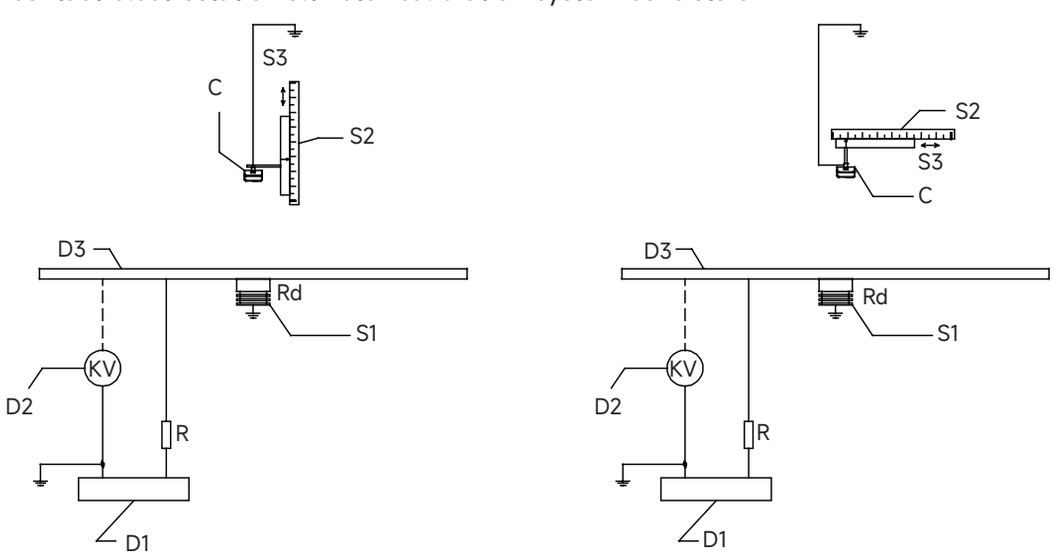

Vertical Testing　　Horizontal Testing

Figure 8 Calibration Test Diagram

The requirements for the equipment and device are as follows:

C——calibrated product: electrostatic sensor
D1——DC high voltage power supply: output range is -20KV ~ +20KV, continuously adjustable, or the minimum stepping is 10V, and measurement uncertainty is less than 1/4 of the allowable error limit of the calibration table.
D2——DC high voltage meter: measurement range is -40KV ~ +40KV and the measurement uncertainty is less than 1/4 of the allowable error limit of the calibration table.
D3——standard plate electrode: the plate electrode should be circular or square rounded corner. It's appropriate that the radius of curvature on the edge of the electrodes does not generate corona and it's recommended that the edges of the electrodes should be wrapped with insulating materials; the plate area should be large enough and the diameter or side length should be no less than 0.4m. Our calibration plate is square stainless steel plate with the dimension of 600mm*600mm.
R——protective resistance: the withstand voltage strength of resistance is 20KV and the current through the protective resistance and human body is < 5mA and the resistance value R conform to the following formula requirement:

$$R/(R+R_d) < 0.1\%$$

Where: R is protective resistance, the unit is Ohm (Ω)
R_d is the resistance of insulating support, the unit is Ohm (Ω), resistance valu > 10^{13}Ω, he withstand voltage strength is > 25KV

The above two kinds of resistance may cause different static voltage values in detection under the same standard voltage due to the different resistance values.

S1 —— insulating support
S2 —— graduated scale, the measurement range is 0mm ~ 750mm and the measurement uncertainty is less than 0.5mm.
S3—— distance regulator: the sensor should be placed on the calibration device to extend out the front end. The geometrical shape and materials of the support should minimize the impact on the distribution of the electrical field around the frontn de of the sensor.

◈ Product Testing Performance

➤ Testing includes vertical and horizontal tests. Sensor test device diagram is shown in Figure 9:

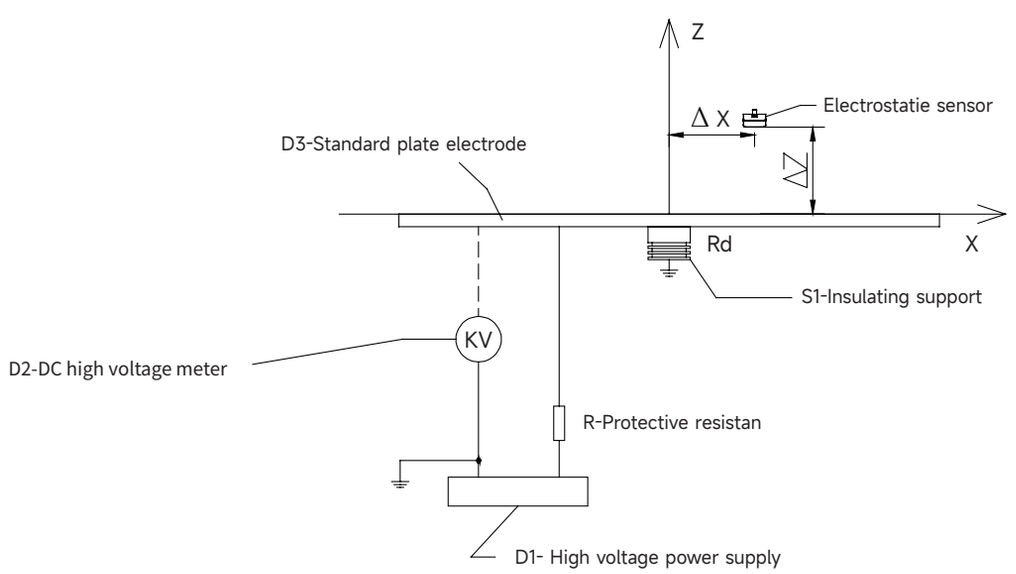

Figure 9 Sensor Test Device Diagram

➤ The test data of the standard plate electrode is as follows:

Electrostatic voltage values were measured at 4 test distances using a 150mm x 150mm stainless steel plate electrode. The test distance refers to the distance between the sensor's detection window side/housing surface and the calibration plate surface (with the sensor positioned directly above the center point of the calibration electrode).In Figure 10, the wavy-colored thick solid line represents the calibration voltage line with a slope of 1. This calibration line is virtual, indicating the ideal scenario where the sensor's measured voltage perfectly matches the voltage applied to the standard plate.

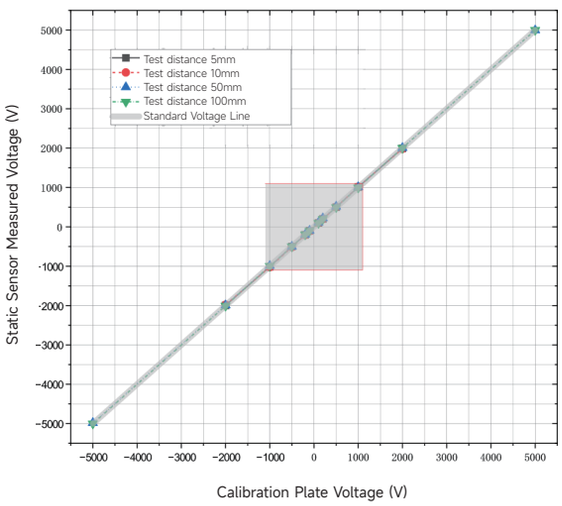

Figure 10-1 Vertical Test Data Diagram of Standard Plate Electrode

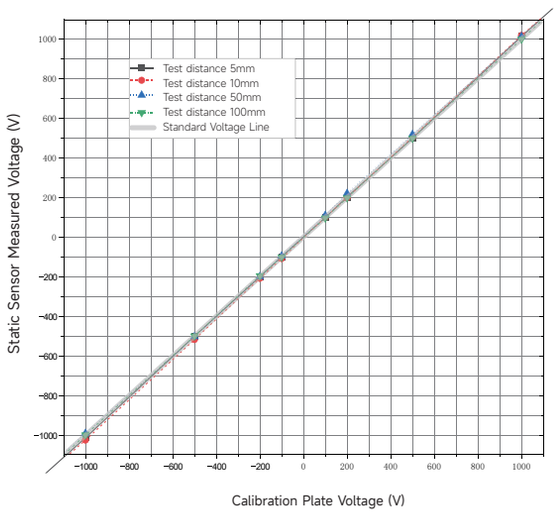

Figure 10-2 Vertical Test Data Diagram of Standard Plate Electrode - Partial Zoom (Red Box)

➤ Horizontal Test Data Between Sensor and Standard Plate Electrode:

① Figure 11 shows test data at a fixed vertical distance of 10mm using a 150mm x 150mm stainless steel plate electrode, with the sensor at various horizontal distances from the plate center (coordinate origin):

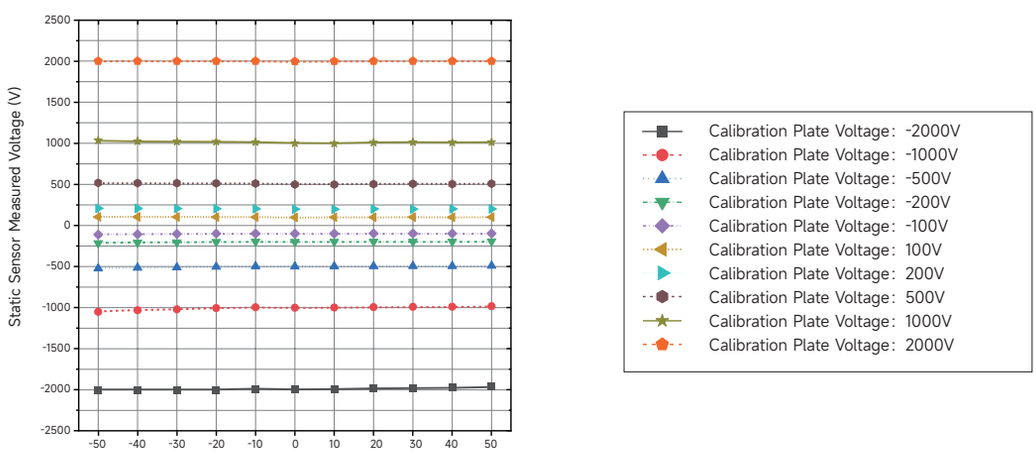

Figure 11 Horizontal Test Data Diagram of the Standard Flat Plate Electrode at a Vertical Distance of 10mm

For the 150 x 150mm calibration plate at 10mm vertical distance, the measurement error can be maintained within 10% in the horizontal range of -50mm ≤ X ≤ 50mm.

➤ Figure 12 shows the test data at 50mm vertical distance using a 150mm x 150mm stainless steel plate electrode, with the sensor positioned at various horizontal distances from the plate center (coordinate origin):

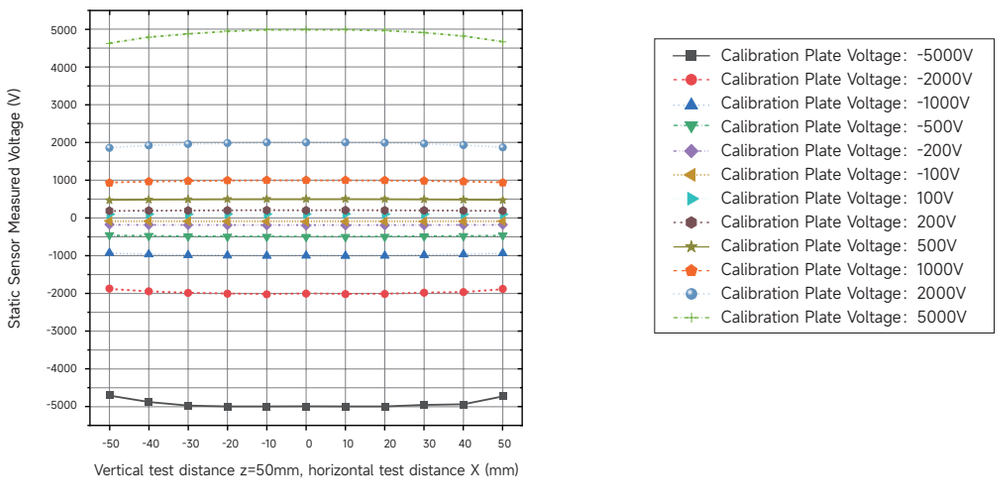

Figure 12 Horizontal Test Data Diagram of the Standard Flat Plate Electrode at a Vertical Distance of 50mm

For the 150 x 150mm calibration plate at 10mm vertical distance, the measurement error can be maintained within 10% in the horizontal range of -50mm ≤ X ≤ 50mm.

➤ ③ Figure 13 shows the test data at 100mm vertical distance using a 150mm x 150mm stainless steel plate electrode, with the sensor positioned at various horizontal distances from the plate center (coordinate origin):

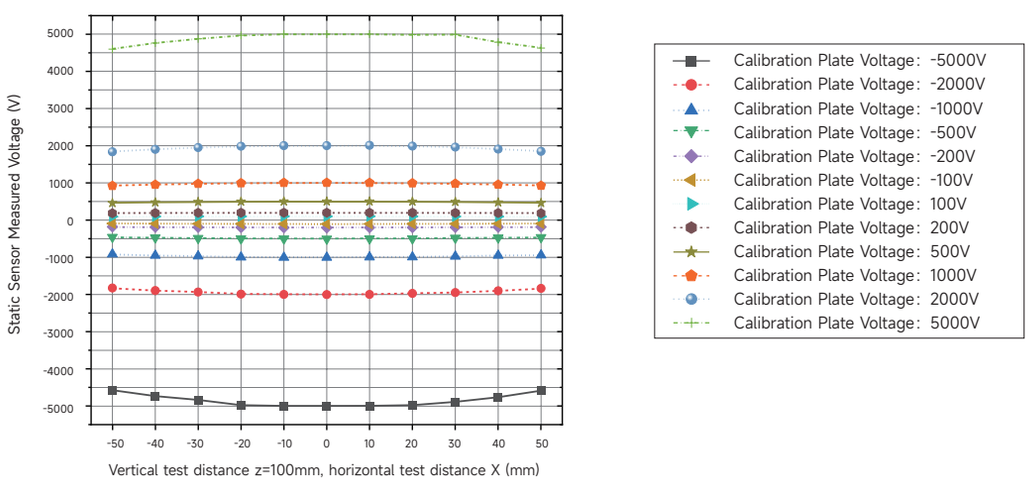

Figure 13 Horizontal Test Data Diagram of the Standard Flat Plate Electrode at a Vertical Distance of 100mm

For the 150×150mm calibration plate at 50mm vertical distance, the measurement error remains within 10% in the horizontal range of -50mm ≤ X ≤ 50mm.

➤ Relative Error in Horizontal Sensor Detection

Based on our 150×150mm calibration plate test data, when the electrostatic sensor is not installed at the center of the object surface, it will produce measurement errors as shown below:

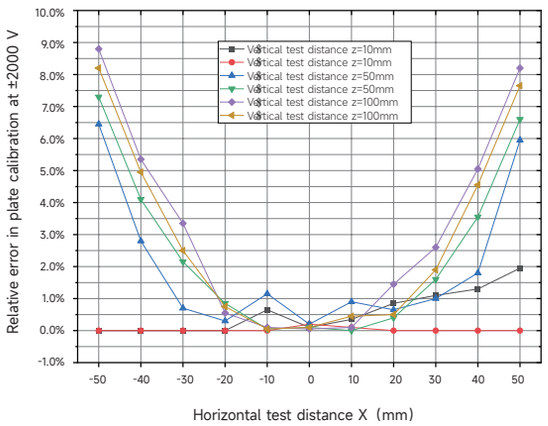

Figure 14-1 Horizontal Detection Error of Sensor

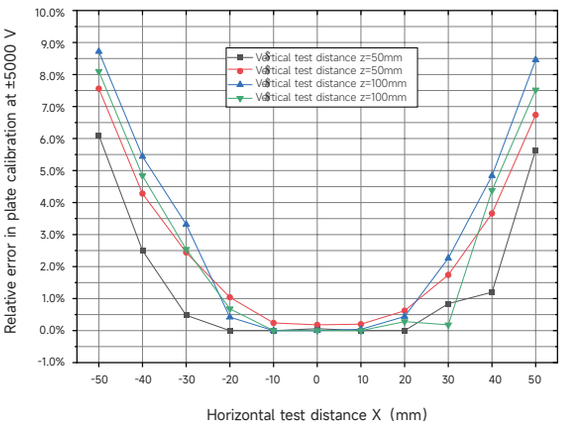

Figure 14-2 Horizontal Detection Error of Sensor

For the 150×150mm calibration plate at 50mm vertical distance, the measurement error can be maintained within 10% in the horizontal range of -50mm ≤ X ≤ 50mm.

➤ Sensor Detection Area:

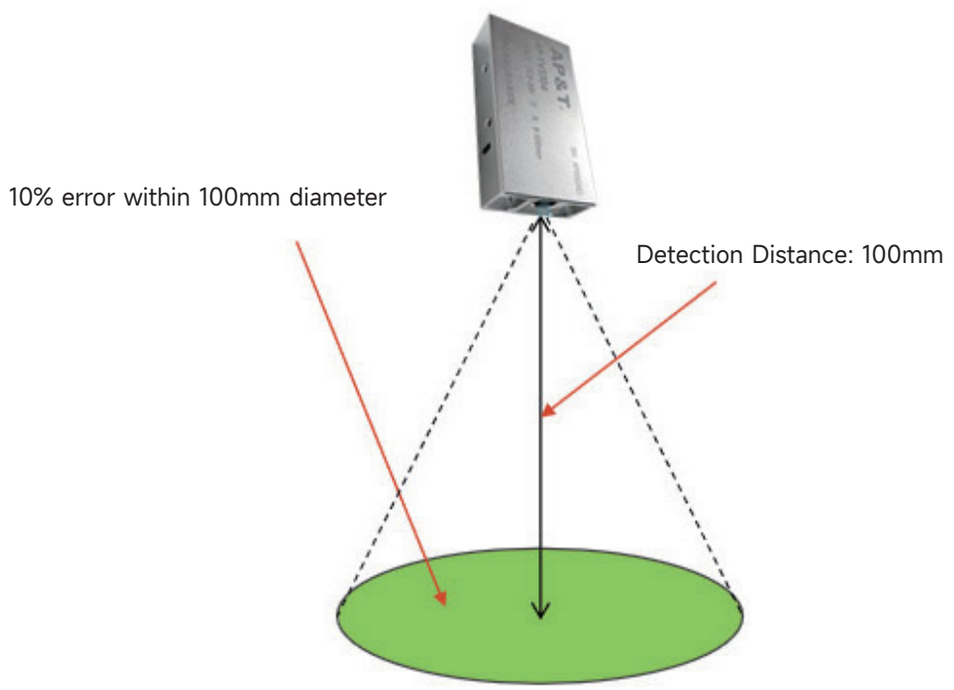

Figure 15 Sensor Detection Area

➤ This sensor cannot perform tilted detection on charged surfaces

According to our 150×150mm calibration plate test data, when the sensor's detection window is not parallel to the charged surface, detection or equivalent measurement may fail:

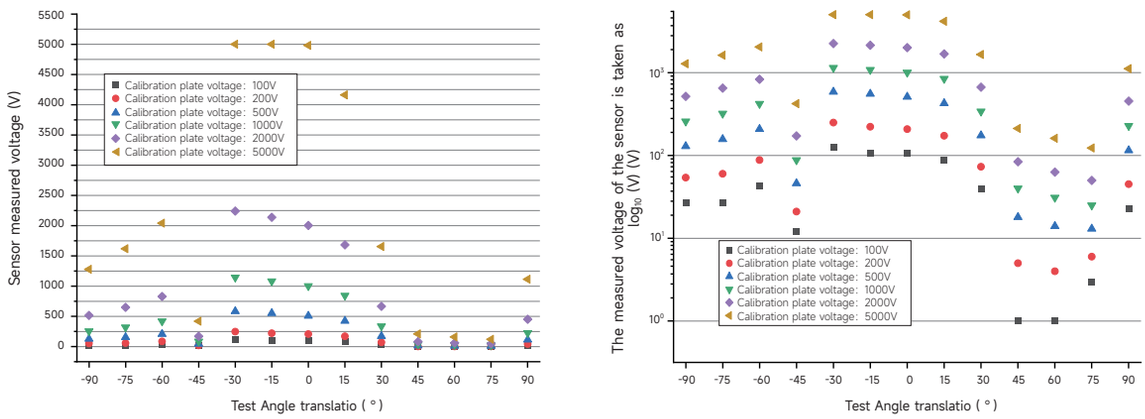

Figure 16 Sensor angle detection data

◈ Operation and Precautions

➤ Operating Instructions

During operation, ensure the sensor's detection window plane remains parallel to the measured surface for optimal measurement accuracy on the terminal display.

➤ Connection Method: (Monitoring terminal, integrated power supply and communication software must be purchased separately. Complete connection methods refer to system monitoring terminal and integrated power supply manuals)

The 24V power adapter's output port, monitoring terminal network port, and sensor network port serve dual purposes (power supply and communication). These ports are interchangeable among the three devices.

- **Connecting Monitoring Terminal:**

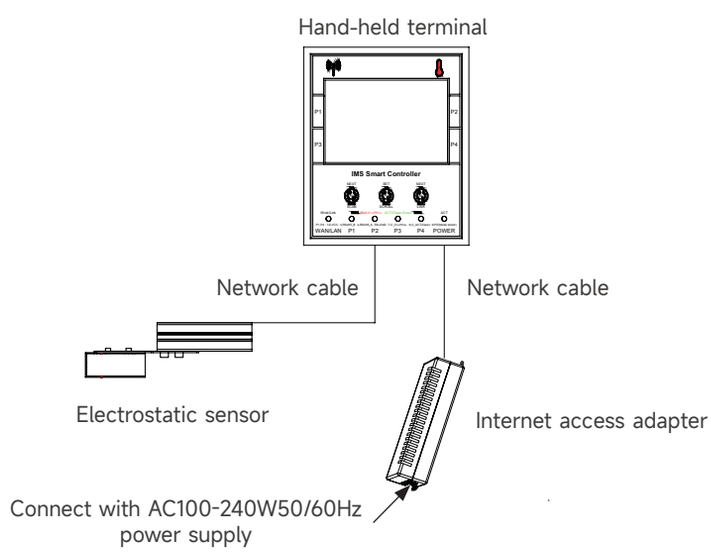

Figure 17 Monitoring terminal connection diagram

• **Connection with PC:**

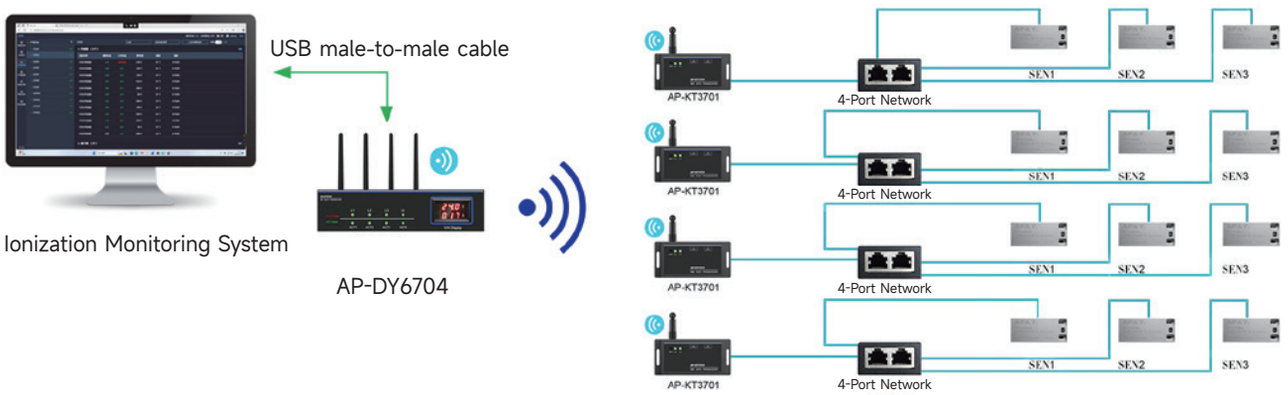

Figure 18 PC Connection Diagram

➤ Functional Diagram:

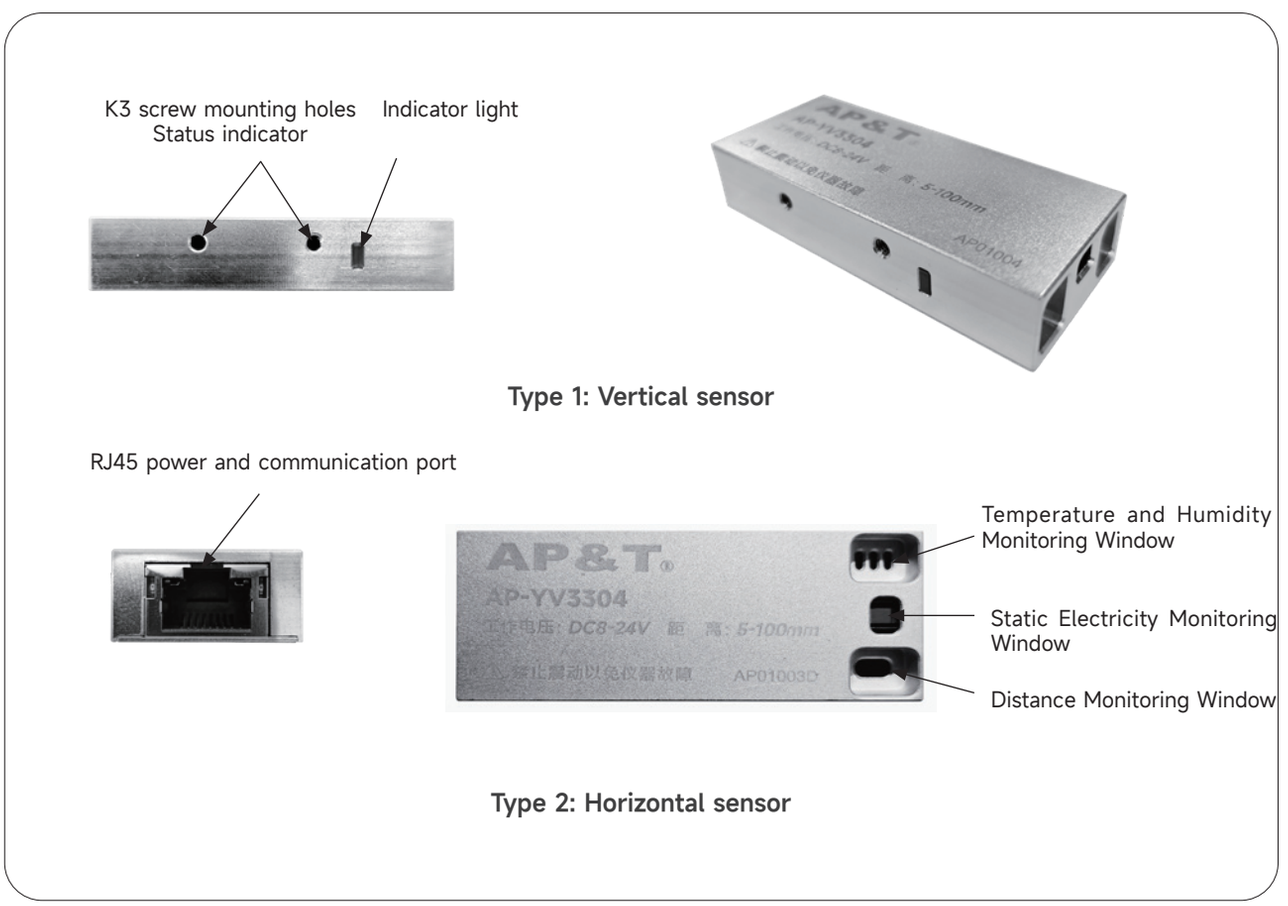

Figure 19 Sensor Functional Diagram

Note: The electrostatic safety (alarm) threshold can be set via remote control or monitoring software based on the protected product's withstand voltage. The status indicator shows green when within threshold and red when exceeded.

➤ **Installation Diagrams:**

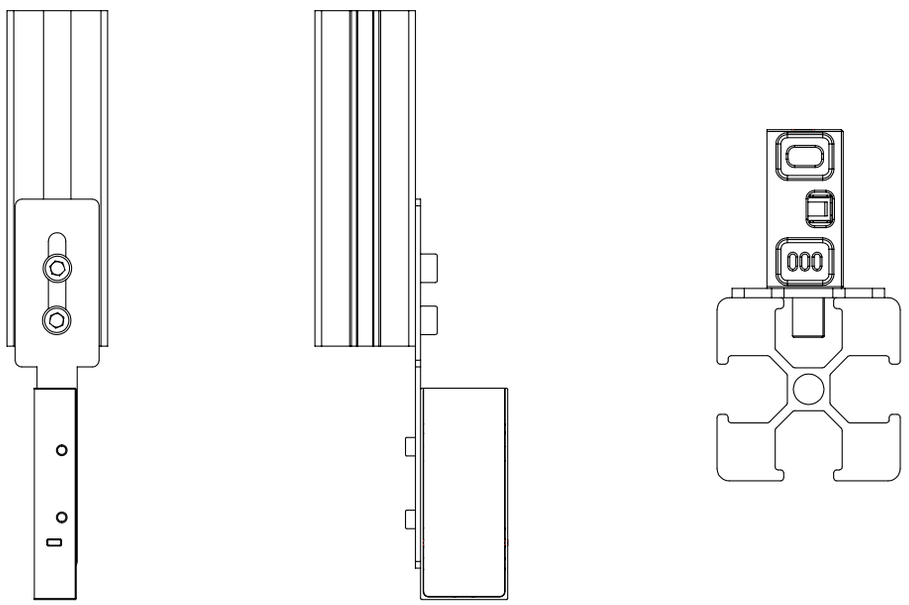

Side View

Bottom View

Type 1
Vertical Sensor Installation

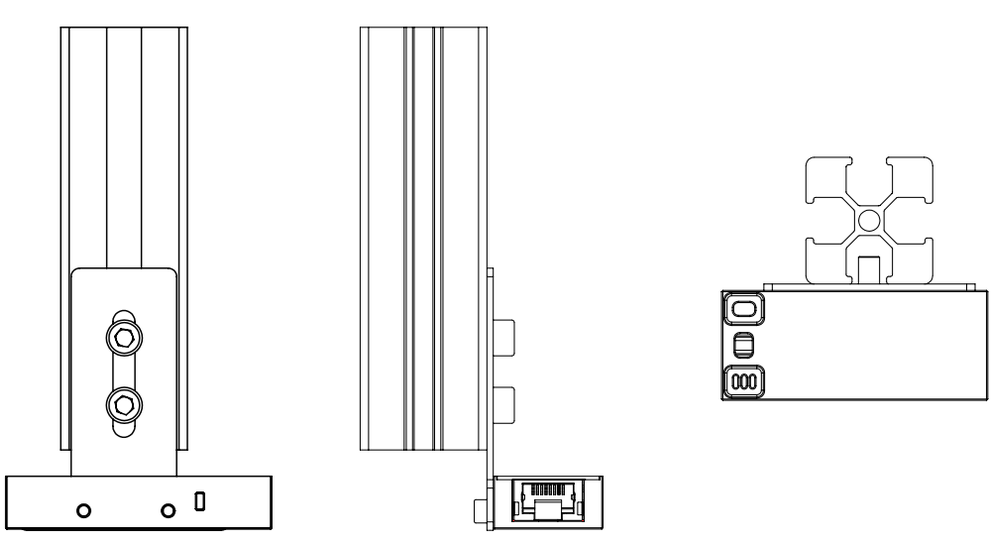

Side View

Bottom View

Type 2
Horizontal Sensor Installation

⚠ Caveat

- For proper use of the unit, please read the instruction manual carefully before use.
- Before powering up the product, please check the specification of the power supply provided, any power supply that does not meet the specification will cause damage or even malfunction to the product.
- Please operate the product at the specified ambient temperature (0 to 50°C).
- When testing, people and products to maintain a distance of 1m or more to avoid the impact of human static electricity on the test; test personnel must wear electrostatic clothing, electrostatic cap, electrostatic shoes.
- Do not touch the electrostatic detection head during measurement.
- The surface of the ϕ5 diameter stainless steel mounting rod must not have an insulating coating.
- Do not touch theelectrostatic detection head during testing.
- Ensure the sensor aperture remains free from particle and dust contamination.
- There must be no obstructions between the sensor and the measured object, otherwise measurement accuracy will be affected.
- No electrical equipment that may interfere with the sensor should be present within the detection range, otherwise internal device and chip failures may occur.
- For accurate measurement of electrically charged objects, the plane of the sensor's detection window must be parallel to the surface of the object to be measured.
- Use it after the power is connected for 5 seconds. Otherwise, the data display may be unstable at times.
- When the charged object is smaller than the calibration plate, the measured value is smaller than the actual
- electrostatic value of the charged object.
- When the charged object is larger than the calibration plate, the measured value is larger than the actual electrostatic value of the charged object.
- Do not zero the sensor in a state with electrostatic charge or during the electrostatic measurement process (not the electrostatic calibration process); if you zero the sensor during the electrostatic test, the displayed electrostatic value will likely be zero.
- Do not install around high-voltage equipment, such as high-voltage power supplies, electrostatic generators, ionizers, and dissipators; high voltages will affect the sensor's performance and detection accuracy.
- Tighten the sensor when installing in high vibration areas; otherwise, data errors may occur.
- Please check the power cord/communication cable of the product regularly, and replace it immediately if it is damaged, otherwise it will easily cause leakage of electricity, poor communication, abnormal operation and other problems.
- The product is subjected to mechanical shocks such as dropping, collision, etc., which may lead to malfunction.

⚠ Safety warning

- The whole set of equipment must be reliably grounded during use, otherwise it will easily lead to abnormal or even damaged sensors.
- It is strictly prohibited to use this equipment in flammable and explosive environments.
- Do not touch the static detection window with sharp objects.
- It is strictly prohibited to contaminate the product with liquids while it is operating, otherwise an abnormality may occur, resulting in electric shock or fire.
- If the detection range is exceeded, the product may malfunction.
- Turn off the power when checking or replacing the product, otherwise it may cause electric shock or fire.
- This tester is a precision device, do not disassemble it.
- Unauthorized disassembly of the product is strictly prohibited, and internal maintenance and repair must be carried out by professionals.
- The product is designed for detecting static electricity on the surface of the object, it is strictly prohibited to do other uses, any abnormal use may cause machine failure, electric shock, fire and other hidden dangers.

⚠ Trouble shooting

NO	Failure	Possible causes	Prescription
1	Power port indicator does not light up	Poor power cord contact	Verify that the power cord is intact and securely connected
		Incorrect power cord connection	Confirm that the power cord is wired correctly
		Power supply mismatch	Confirmation of power supply specifications (INPUT: 100-240VAC 50/60Hz; OUTPUT: 24VDC 2000mA)
2	The measured static voltage value is abnormal or the error is too large	Poor sensor grounding	Verify that the sensor is well grounded
		The presence of high-voltage equipment around the sensor, ionizing equipment or Electromagnetic equipment	Removal of high-voltage, ionizing or strong electromagnetic equipment
		Incorrect setting of range position or detection distance	Reference gear range setting table
		Improper sensor mounting setup orientation	Confirm the correct mounting position and refer to the operation and use precautions
3	Threshold alarm indicator green light does not light up	——	Return to factory for maintenance
4	Threshold alarm indicator red light does not light up	The set electrostatic threshold is large or exceeds the range	According to the use of the environment and static electricity control requirements, refer to the gear range setting table, reasonably determined Constant Static Alarm Threshold
5	Product has an odor	Component burnout	Return to factory for maintenance
6	If you have any other problems not listed above or if you still cannot solve the problem with the above program, please contact the manufacturer or seller		

⚠ Maintenance

- ➤ In order to ensure the good performance of the product, when not in use, please store the device in a dry place away from light and do not weigh it down.
- ➤ This device is a precision detector, do not use strong vibration.

◈ Sensor Accessories List

Product Name shielded network cable (2.5m)	Standard or Optional	Part No.	Specification	Picture	Application
Waterproof shielded network cable (2.5m)	Standard	8WXI00004	Cat5e double-shielded cable		For power and data communication
Power adapte	Standard	AP2930003	Input voltage: AC100-240V Output voltage: DC24V Output current: 2A Output power: 48W		For power and data communication
Power cord	Standard	8YXG25110	Standard 1.8m, optional 3m/5m		For adapter connection

⚠ After-sales service

➤ AP-YV3304 electrostatic sensors have been carefully tested and aged before leaving the factory, and their performance fully meets the relevant indexes indicated in the instruction manual.AP&T promises the following to the users: within one year from the date of purchase, we will repair or replace any defective parts that have been inspected by the company free of charge. However, this promise does not apply to the following situations:

1. The device is being used incorrectly;
2. Damage caused by negligence or accident during use;
3, their own alteration, disassembly or has been other non-Ampin authorized service department repair;
4. Failure caused by external factors such as fire, earthquake, flood and abnormal voltage.

➤ Beyond the specified component repair or replacement, AP&T shall not be liable for any responsibilities arising from product misuse.

AP&T®

AP&T®

SPECIALITY CREATES VALUE

Professional electrostatic intelligent monitoring/analysis
and elimination solution provider

Shanghai Anping Static Technology Co.,Ltd

Tel：021-6451 7861
Website：www.ap-static.com
Address：3-4/F,Building 27,No.69,Guiqing Road,Shanghai,China