AP&T®

STATIC
CONTROL
SOLUTION

# Ion Balance Sensor

AP-YC2902




021-6451 7861

www.ap-static.com


WeChat

WeChat Channels

TikTok

AP&T®



## Product Applications

Used for online monitoring and real-time feedback of ion balance for Anping ion fans and ion bars.

## Product Parameter

| Product Model | | AP-YC2902 |
|---|---|---|
| Ion Balance Measurement | Measuring Range | 0-1000V |
| | Measurement Accuracy | 1V for <20V; ±5% for >20V |
| | Minimum Display Unit | 1 V |
| | Sampling Period | About 1ms |
| | Installation Distance | Recommended to be at least 50mm away from ion fans and ion bars |
| Temperature Measurement | Measuring Range | 0 to +50° C |
| | Minimum Display Unit | 0.1° C |
| | Sampling Period | 0.5 s |
| Humidity Measurement | Measuring Range | 10% to 85% RH |
| | Minimum Display Unit | 1%RH |
| | Sampling Period | 0.5 s |
| Environmental Tolerance | Ambient Temperature | 0 to +50° C |
| | Relative Humidity | 10 to 85% RH（Non-condensing） |
| Indicator Light | | Blue Light - Steady On - Preheating |
| | | Green Light - Steady On - Operating |
| | | Red Light - Flashing - Alarm |
| Material | | AL、SUS、PVC、PTFE |
| Net Weight | | About 30g |

AP&T®

## Product Appearance







## Product Dimension

Unit: mm

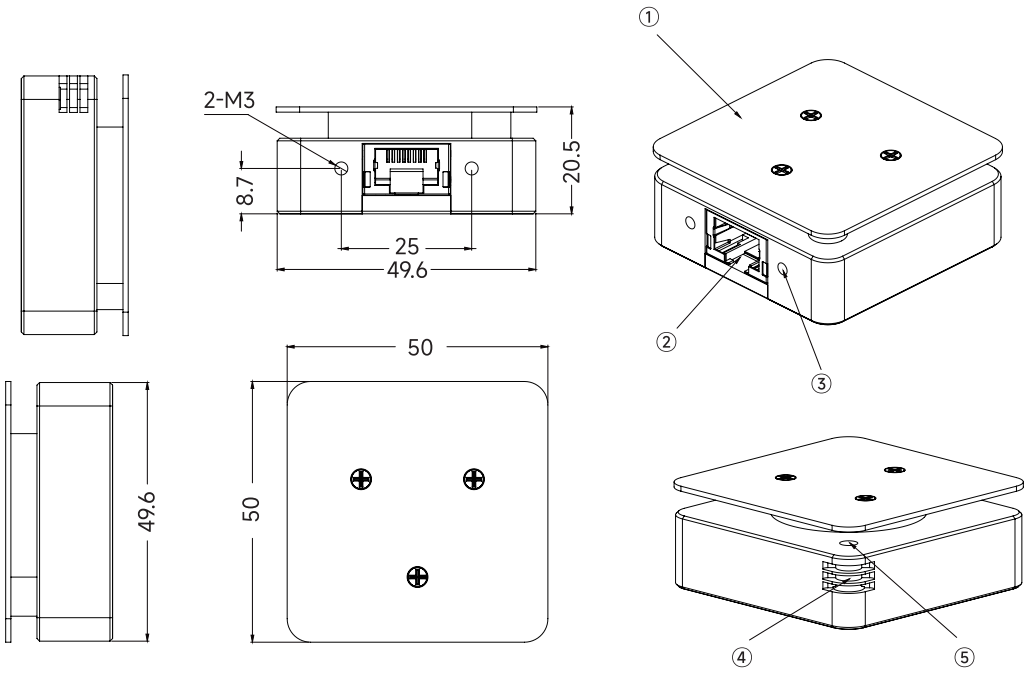


① Sensing Plate
② Power over Ethernet (PoE) Port
③ M3 Mounting Hole
④ Temperature & Humidity Sensor Window
⑤ Operating Status Indicator Light

AP&T®

# Product Usage and Installation

## (1) Installation and Usage Guide

1. Install the ion balance sensor securely near the object to be neutralized, and ensure the sensor sensing plate faces the same direction as the object surface (both outward normal direction).
2. Insert the compatible RJ45 network cable into the RJ45 power/communication port of the static eliminator (e.g., ion fan).
3. The ion balance sensor may be affected by the shape and static charge of surrounding objects, as well as ambient airflow, so its measured data may differ from that measured by a standard charged plate monitor.

## (2) RJ45 Interface Wiring Information

| RJ45 Interface Wiring Information | | |
|---|---|---|
| 1 | Orange | VCC: +24VDC |
| 2 | White/Orange | VCC: +24VDC |
| 3 | Blue | RS485+B |
| 4 | White/Blue | RS485+A |
| 5 | Green | GND |
| 6 | White/Green | GND |
| 7 | Brown | $V_{TH}$: Sensor Threshold Alarm |
| 8 | White/Brown | ACT: Sensor Power-on Indicator |
| 9 | Metal shield | PE |

## ⚠ Safety Warnings

- Before installing and using this equipment, please read the instruction manual carefully.
- This equipment should not be used in environments with >70% humidity.
- It is strictly prohibited to use this equipment in flammable and explosive environments.
- Unauthorized disassembly of the product is strictly prohibited. Internal maintenance and repairs must be performed by qualified personnel.
- The product must not come into contact with conductive liquids, otherwise malfunctions may occur, leading to electric shock or fire.
- When inspecting or replacing the product, the power must be turned off, otherwise it may cause electric shock or fire.
- This product is specifically designed for monitoring ion balance of static eliminators. Any other use is strictly prohibited. Abnormal use may cause machine failure, electric shock, fire, or other accidents.
- Regularly inspect the product's power/communication cable. If damaged, replace it immediately; otherwise, issues such as leakage, poor communication, or abnormal operation may occur.

AP&T®

# Product Maintenance

1. To ensure good product performance, clean and maintain the product regularly according to the operating environment and electrostatic protection requirements: gently wipe off dust and dirt from the product (especially the sensing plate and insulating standoffs) using a lint-free cloth moistened with anhydrous alcohol. Note:

   A、Operation must be performed with power disconnected

   B、After cleaning, wait until the alcohol has completely evaporated before powering on. Do not use any other organic solvents for cleaning

2. Do not push or press the RJ45 port on the device with excessive force; otherwise, permanent damage to the component will occur.

3. If the operating indicator light on the RJ45 port of the device goes off, stop using the device and have it inspected and repaired by professional maintenance personnel. Do not use it again until its electrical performance parameters are tested and found normal.

## ⚠ After-Sales Service

- The AP-YC2902 ion balance sensor undergoes rigorous testing, inspection, and burn-in treatment before leaving the factory, and its performance fully meets the relevant specifications stated in the instruction manual.
- AP&T makes the following commitment to users: within one year from the date of purchase, the company will repair or replace free of charge any part that, upon inspection by the company, is found to be defective. However, this commitment does not apply to the following situations:

  A、Incorrect use or installation

  B、Damage caused by negligence or accident during use

  C、The product has been modified, disassembled, or repaired by a service department not authorized by Anping

- Except for the repair or replacement of parts as specified herein, AP&T assumes no other obligations or liabilities related to the product user.

# Product Packaging Accessories

| Name | Picture | Part No. | Specs | Note |
|---|---|---|---|---|
| Power Adapter |  | AP2930003 | GRT-240200 DC24V 2A P/N:1/2+ 5/6- Metal RJ45 Port PE Ground | 1 |
| National Standard Power Cord |  | 8YXG25110 | Standard 1.8m，Optional 3m/5m | 1 |
| Black Shielded Network Cable with RJ45 Connectors at Both Ends | 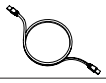 | 8WXI00004 | Standard 2.5m，Optional 5m/10m | 1 |
| Nickel-Plated Cross Recessed Countersunk Head Screw |  | 1DCA0306G | H3*6 | 2 |

AP&T®

AP&T®

**SPECIALITY CREATES VALUE**

Professional electrostatic intelligent monitoring/analysis and elimination solution provider

**Shanghai Anping Static Technology Co.,Ltd**

Tel：021-6451 7861
Website：www.ap-static.com
Address：2-3/F,Building 27,No.69,Guiqing Road,Shanghai,China